UNIVERSITY OF KENTUCKY
College of Engineering

Respirable Dust Study for Kentucky Coal Mines

Final Report

Submitted to

Kentucky Department for Energy Development and Independence

June 2013

Thomas Novak, Ph.D., P.E.

Joseph Sottile, Ph.D.

Department of Mining Engineering

University of Kentucky

Table of Contents

List of Figures ii

List of Tables iii

Abstract 1

Background and Introduction 2

Preliminary Studies 5

Preliminary Study 1 5

Preliminary Study 2 11

In Depth Study for Characterizing Variability of Dust Measurements 18

Methodology 18

Mine and Unit Selection 18

Instruments 19

Personal Sampling Procedure 19

Data Validation 20

Dust Concentration Measurements 20

Data Characterization 20

Results 21

Discussion 24

Impact of ECV 25

Impact of Sample Size 26

Summary and Conclusions 27

References 27

List of Figures

Figure 1. Dust samplers 2

Figure 2. Lippmann canister with single inlet 4

Figure 3. Plan view of a super section in Mine B 6

Figure 4. Dust measurement location for both sections 7

Figure 5. Instrument mounting position identification 7

Figure 6. Instrument arrangement – Section 1 – Coal Seam 1 8

Figure 7. Instrument arrangement – Section 2 – Coal Seam 2 8

Figure 8. End-of-Test Dust Concentrations – First Day – Section 1 – Seam 1 10

Figure 9. End-of-Test Dust Concentrations – First Day – Section 2 – Seam 2 10

Figure 10. Difference (CMDPSU – CPDM) between readings for devices at the same location 11

Figure 11. Plot of the 30-minute dust concentration for a CPDM from the Preliminary Study 1 11

Figure 12. Measurement arrangement for Preliminary Study 2 12

Figure 13. Dust monitor arrangement for Day 1 13

Figure 14. Dust monitor arrangement for Day 2 14

Figure 15. Dust monitor arrangement for Day 3 15

Figure 16. End-of-Test Dust Concentrations – Day 1 – Section 1 16

Figure 17. End-of-Test Dust Concentrations – Day 2 – Section 1 17

Figure 18. End-of-Test Dust Concentrations – Day 3 – Section 1 17

Figure 19. Difference (CPDM – CMDPSU) between readings for devices at the same location 18

Figure 20. AD test for Mine B using Johnson transformed data 22

Figure 21. AD Test for the combined, Johnson-transformed mine dust measurements 24

Figure 22. 95% Upper confidence bound for a single-shift sample 26

List of Tables

Table 1. Proposed Single-Shift Excessive Concentration Values 5

Table 2. Respirable Dust Measurement Results – Day 1 – Section 1 – Seam 1 10

Table 3. Respirable Dust Measurement Results – Day 2 – Section 2 – Seam 2 10

Table 4. Respirable Dust Measurement Results – Day 1 – Section 1 – Seam 1 14

Table 5. Respirable Dust Measurement Results – Day 2 – Section 1 – Seam 1 15

Table 6. Respirable Dust Measurement Results – Day 3 – Section 1 – Seam 1 16

Table 7. Overview of Dust Sampling Program 21

Table 8. Summary of Goodness-of-fit Results for Data Using Johnson Transform 23

Table 9. Relative Standard Deviation (RSD) Values of Dust Measurements 24

Table 10. Shape, Location, and Scale Parameter Estimates for Combined Data 25

Table 11. Revised CPDM Excessive Concentration Values for Different Sample Sizes . . . 27

Abstract

Characterizing occupational exposure to regulated substances requires an understanding of both the accuracy and variability of measurements. This understanding is especially important for underground coal mining, where new and more stringent respirable-dust regulations have been proposed. The proposed rule not only reduces the dust-exposure limit from 2.0 mg/m^3 to 1.0 mg/m^3, but also requires using a single-shift measurement, every shift, for determining compliance, instead of the current requirement of using the average of five consecutive shifts, collected on a bimonthly basis.

The proposed compliance limit for a single-shift measurement only takes into account the variability associated with the dust measuring instrument; however, numerous environmental factors significantly affect the variability of dust measurements in underground mining because the workplace location and ventilation controls are continually changing, and machinery is constantly moving. This report presents results from a study that was conducted at three underground coal mines, in which 600 single-shift dust-concentration samples were collected to characterize the variability of dust measurements using Continuous Personal Dust Monitors (CPDMs) in the workplace. Analysis of the data established a pooled relative standard deviation (RSD) from the three mines of 0.47, compared with the RSD of 0.078 that is used for determining the proposed compliance limit. The Johnson transformation with a log function provided the best-fit distribution model for characterizing the variability of the collected measurements. Based on these results, an alternative procedure is presented for characterizing the variability of coal mine dust measurements. An appropriate sampling-variability value is also suggested for calculating occupational exposure with a 95% upper confidence bound.

Background and Introduction

Coal workers' pneumoconiosis (CWP), commonly referred to as *black lung*, is a chronic lung disease that results from long-term inhalation and deposition of coal-dust in mineworkers' lungs. Excessive concentrations of very fine dust particles, less than 10 µm, cause the formation of scar tissue in the air-exchange regions of the lungs, resulting in massive fibrosis in the advanced stages of the disease. Over four decades ago, Congress responded to the CWP problem through the Federal Coal Mine Health and Safety Act of 1969 (Public Law 91-173, 1969) by mandating the following:

> *Each operator of a coal mine shall take accurate samples of the amount of respirable dust in the mine atmosphere to which each miner in the active workings of such mine is exposed.*

and that,

> *… each operator shall continuously maintain the average concentration of respirable dust in the mine atmosphere during each shift to which each miner in the active workings of such mine is exposed at or below 2.0 milligrams of respirable dust per cubic meter of air.*

As a result, the prevalence of CWP steadily, and significantly, declined over the three decades following the Act. According to the National Institute for Occupational Safety and Health (NIOSH, 2008)), however, the declining trend in CWP ended around 2000, and its prevalence has since begun to rise. NIOSH claims that, for miners with 25 or more years of experience, the occurrence rate of CWP has nearly doubled since its low point and that the disease is occurring in younger miners. Furthermore, NIOSH states that its progression rate from beginning stages to more advanced stages has accelerated. The NIOSH report has generated significant controversy within the coal mining industry because the results are based solely on mineworkers who voluntary participate in the NIOSH Coal Workers' Health Surveillance Program (CWHSP).

Current regulatory standards require coal mine operators to continuously maintain an average concentration of respirable-dust exposures for mineworkers at or below 2.0 mg/m^3, provided the quartz content of the dust is below five percent (30 CFR 70.100). (If the quartz content of the dust at a specific mine exceeds five percent, the dust standard is reduced accordingly.) Mine operators must obtain bimonthly respirable dust samples from designated equipment operators and submit the samples to the Mine Safety and Health Administration (MSHA) for analysis. Each designated equipment operator is required to wear a Coal Mine Dust Personal Sampler Unit (CMDPSU), as shown in Figure 1(a), for an eight-hour period during the work shift. Compliance with the dust standard is determined by the average dust concentration of five valid samples taken during five consecutive, normal-production shifts. A *normal-production* shift is currently defined as a shift where coal production is at least 50% of the average production for the 30 most-recent production shifts.

In response to the NIOSH reports (NIOSH, 1995; NIOSH, 2008), MSHA is now proposing significant changes to the existing dust regulations (U.S. Department of Labor, 2010). Major provisions of the proposed respirable-dust rule include the following:

- Lowering the existing exposure limit from 2.0 mg/m^3 to 1.0 mg/m^3,
- Requiring full-shift sampling, converted to an 8-hr equivalency, instead of the standard 8-hr sampling,
- Redefining the term *normal production shift*, from 50% or higher of the average coal production for the 30 most-recent production shifts to the average coal production for the 30 most-recent production shifts,
- Requiring single-shift-compliance sampling, instead of the average dust concentration of five valid samples taken during five consecutive, normal-production shifts, and
- Establishing sampling requirements for the use of a recently commercialized Continuous Personal Dust Monitor (CPDM), shown in Figure 1(b).

The proposed rule totally phases-out the use of CMDPSUs (Colinet, et. al, 2010) for dust sampling within 12 months of the effective date of the final rule. These devices will be replaced by CPDMs. NIOSH funded the development of the CPDM, which is a continuous dust monitor integrated into a miner's cap-lamp/battery assembly. The CPDM operates continuously for 12 hours and displays the following three values: (1) respirable-dust concentration for the most recent 30-minute period, (2) the average respirable-dust exposure from the beginning of the shift, and (3) the projected end-of-shift respirable dust exposure if the miner receives no further exposure.

a. Coal Mine Dust Personal Sampler Units (CMDPSU)

b. Continuous Personal Dust Monitor (CPDM)

Figure 1. Dust samplers. (Colinet, et. al, 2010)

The current and proposed rules are derived from The Federal Mine Safety and Health Acts of 1969 and 1977 (Public Law 91-173, 1969; Public Law 95-164, 1977). Title 30 of the U.S. Code § 811(a)(6)(A)) states that the Secretary of Labor, in promulgating mandatory dust standards, "shall set standards which most adequately assure on the basis of the best available evidence that no miner will suffer material impairment of health or functional capacity." Furthermore,

mandatory standards "shall be based upon research, demonstrations, experiments, and such other information as may be appropriate" and other considerations shall include "the latest available scientific data in the field, the feasibility of the standards, and experience gained under this and other health and safety laws."

Title 30 of the U.S. Code § 842(b)(2) states that "each operator shall continuously maintain the average concentration of respirable dust in the mine atmosphere during each shift to which each miner in the active workings of such mine is exposed" at or below the mandatory dust standard. Under 30 U.S.C. § 842(f) of the Mine Act, the term *average concentration* was defined to mean "a determination which accurately represents the atmospheric conditions with regard to respirable dust to which each miner in the active workings of a mine is exposed" as measured "over a single shift only, unless the Secretary [of Labor] and the Secretary of Health and Human Services find, in accordance with the provisions of section 811 of this title, that such single shift measurement will not, after applying valid statistical techniques to such measurement, accurately represent such atmospheric conditions during such shift." If MSHA promulgates a mandatory dust standard that relies on a single-shift measurement for determining the average respirable-dust concentration for that shift, the single-shift measurement must accurately represent the atmospheric respirable-dust conditions after applying valid statistical techniques as well as being based on research, demonstrations, experiments, feasibility, experience, and the latest available scientific data in the field.

NIOSH published results of a study (Volkwein, 2004) which determined instrument-to-instrument variability of the pre-commercial CPDM in a controlled *area sampling* configuration. MSHA used this data to assert that single-shift measurements met statutory accuracy requirements. In order to make this assertion, MSHA has to assume that the instrument-to-instrument variability of measurements, taken in a controlled area sampling configuration, is the same as the variability that occurs when the CPDM is worn by a miner in an actual workplace environment. However, the CPDM precision values derived from the NIOSH study were based on stationary, area samples that were taken in the field using a Lippmann-type sampling apparatus (Page, et al., 2008). The Lippmann chamber, shown in Figure 2, is specifically designed to minimize spatial variability associated with mine sampling for the purpose of evaluating comparisons among instruments. From these stationary samples, NIOSH calculated the relative standard deviation (RSD) of the CPDM to be 0.078. (The relative standard deviation is the absolute value of the standard deviation divided by the mean.) For the proposed dust rule, MSHA uses this value to calculate an error factor by the following (NIOSH, 1995):

$$\mathrm{EF} = 1 + [(1.645)(\mathrm{RSD})] = 1 + [(1.645)(0.078)] = 1.128$$

The constant 1.645 is a one-tailed 95% confidence coefficient and is derived from the standard normal probability distribution. This error factor is then used to calculate what MSHA refers to as the Excessive Concentration Value (ECV) as follows:

$$\mathrm{ECV} = \mathrm{EF} \cdot (\text{Applicable Dust Standard}).$$

Figure 2. Lippmann canister with single inlet. (Page, et al., 2008)

Therefore, if the applicable dust standard is 1.0 mg/m^3, the ECV is 1.13 mg/m^3 (the calculated ECV is rounded up to the next exact multiple of 0.01 mg/m^3). MSHA proposes to use this ECV to ensure that noncompliance is cited only when there is a 95-percent level of confidence that the applicable respirable dust standard has actually been exceeded. The ECV values for other applicable standards are listed in

Table 1, reproduced from Table 70-2 of the proposed rule.

Table 1. Proposed Single-Shift Excessive Concentration Values (U.S. Department of Labor, 2010).

TABLE 70–2—EXCESSIVE CONCENTRATION VALUES (ECV) BASED ON SINGLE-SHIFT CPDM EQUIVALENT CONCENTRATION MEASUREMENTS

Applicable Standard (mg/m^3)	ECV (mg/m^3)
2.0	2.26
1.9	2.15
1.8	2.04
1.7	1.92
1.6	1.81
1.5	1.70
1.4	1.59
1.3	1.47
1.2	1.36
1.1	1.25
1.0	1.13
0.9	1.02
0.8	0.91
0.7	0.80
0.6	0.68
0.5	0.57
0.4	0.46
0.3	0.34
0.2	0.23

(It should be noted that the applicable dust standard, in mg/m^3, is lowered for specific mines if the silica content of the respirable dust exceeds 5%.)

The error factor, and by extension the ECV, is especially critical when used to determine the true concentrations based on single-shift samples. If the error factor does not account for all sources

of error, cases will occur where excessive concentrations are falsely concluded to exist, and there will be cases where samples are found to be in compliance when in fact they are not. The current procedure of using a sample size of five to determine mine atmospheric dust levels reduces variability significantly compared with using single-shift samples. At the time of writing the proposed rule, little data existed on the variability of actual mine dust levels which MSHA could use to meet the "application of valid statistical techniques" required by the Mine Act. As a result, MSHA assumed that the only source of variability for establishing the accuracy of a single-shift measurement was that obtained from the CPDM measurements that were taken in a stationary area sampling configuration.

Other valid sources of variability exist, however, and must be considered in determining the ECV. NIOSH, for example, documented that variability occurs with the sampling inlet location on a human torso (Vinson, et al., 2007). NIOSH also published data showing that personal habits, such as wearing dust-soiled clothing during sampling, can change a measurement of the environment significantly. Other sources of variability that occur during personal monitoring have been documented, such as the effects of body temperature and air speed around a person's torso (Cecala and Thimons, 1986). Collecting a sample on an individual introduces far more variability than that represented by the NIOSH RSD value for the precision of the sampler (Volkwein, et al., 2004), and valid statistical techniques applied to sampling must account for all sources of variability.

This report presents the results of a study that was conducted with the goal of characterizing the variability of respirable-dust sampling in underground U.S. coal mines. The study was conducted at three coal mines, which will be referred to as Mines A, B, and C. Subsequently, an alternative method for developing an appropriate single-shift ECV, based on measured variability obtained from the study and the application of valid statistical techniques, is presented. The report also presents appropriate Excessive Concentration Values for five- and ten-shift samples. Additionally, initial base-line studies were conducted at Mine B for comparing the measurements of the CPDM with those of the CMDPSU. The results of these preliminary studies are presented next.

Preliminary Studies

Two preliminary studies were conducted to compare the measurement results of the CMDPSU with those of the CPDM and to determine the variability of each type of instrument.

Preliminary Study 1

The first preliminary study was conducted over two days, in two separate mining sections (Sections 1 and 2) that are located in two separate coal seams (Coal Seams 1 and 2) at Mine B. Both continuous-mining sections were similar in their layouts and operations. A *super-section* arrangement, which is illustrated in Figure 3, was used with two continuous mining machines operating at the same time. Nine or ten entries are developed, and a dual-split ventilation system is used to provide a separate air split for each mechanize mining unit (MMU).

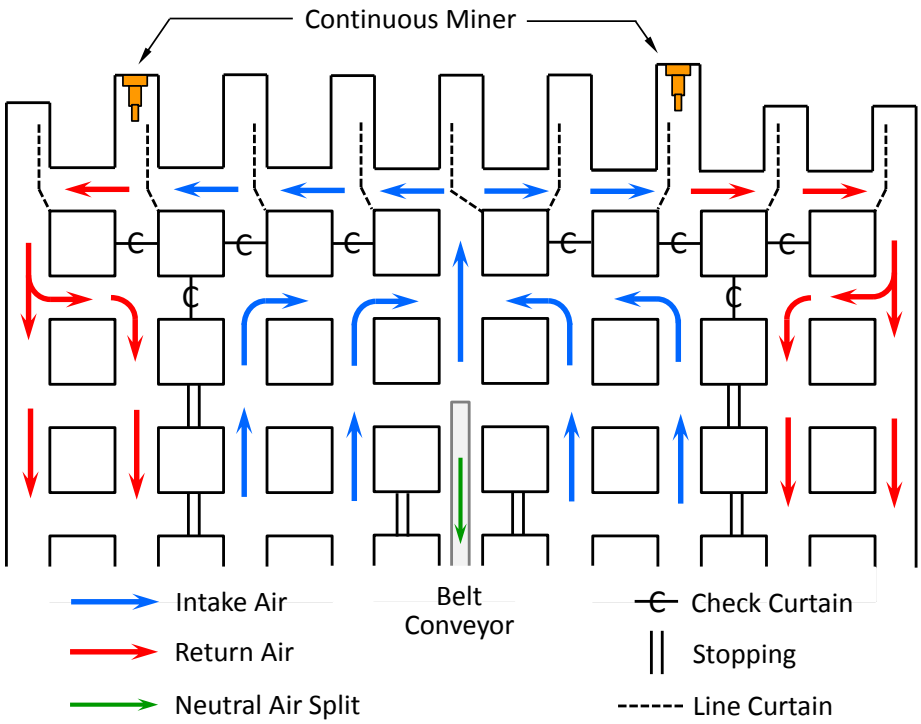

Figure 3. Plan view of a super section in Mine B.

The measurement locations for both mining sections were in the far left return airway, as illustrated in Figure 4. This location was selected so that it was close enough to the mining face to allow the measurement of representative dust concentrations, yet far enough to reduce spatial variability by providing a relatively uniform dust concentration throughout the cross-sectional area of the airway. The inlet ports of nine CPDMs and nine CMDPSUs were mounted, side-by-side, to a wire-mesh that was stretched across the return entry, as shown in Figure 5, with their mounting positions identified numerically. Each matched pair of instruments was set to operate for the same time period. The CPDMs were cleaned and calibrated by the manufacturer prior to the study. The instruments for both types of monitor were originally numbered 1 through 9.

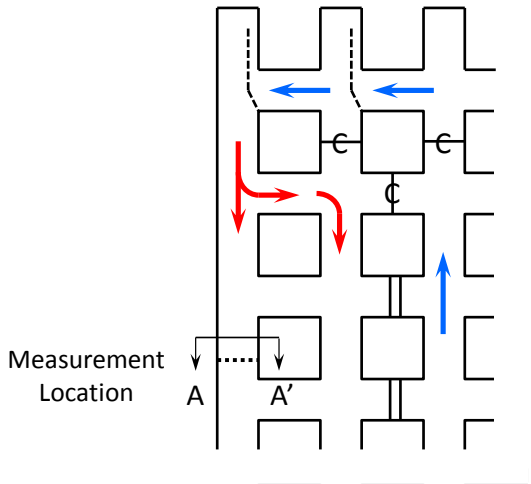

Figure 4. Dust measurement location for both sections.

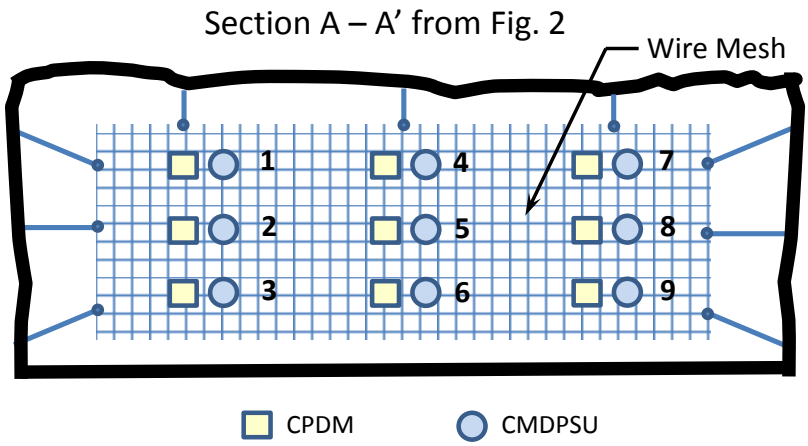

Figure 5. Instrument mounting position identification.

It should be noted that CPMDs #2 and #4 failed during the installation on the first day and were replaced with CPMDs #11 and #12, respectively, as shown in Figure 6. Unit #12 was incorrectly programmed so its results for the first day were discarded.

The position of each numbered monitoring device is shown in Figures 6 and 7 for the first and second testing days, respectively. The data from the CPDMs were downloaded to a computer at the mine site after each day of sampling. The filter cassettes from the CMDPSUs were shipped to an independent laboratory after the dust sampling was completed. The results of the first and second test days are shown in Tables 2 and 3, respectively.

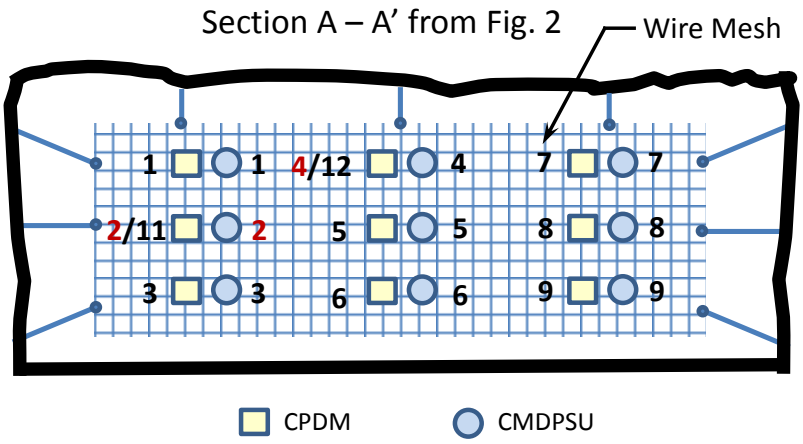

Figure 6. Instrument arrangement – Section 1 – Coal Seam 1.

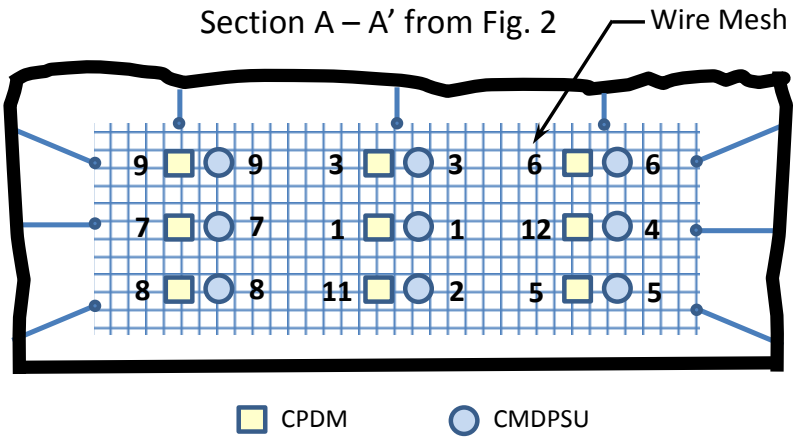

Figure 7. Instrument arrangement – Section 2 – Coal Seam 2.

The CMPSU results have corrected and uncorrected concentrations in Tables 2 and 3. According to the lab personnel, the correction factor used for weight analysis is 0.26 mg, which accounts for the mean difference between the analytical-balance readings from the lab and MSHA. The lab gets bulk cassettes from MSHA two to three times per year and randomly selects about 15-20 cassettes, weighs them (unused), and compares its weights with the recorded MSHA weights to obtain the correction factor. The use of this correction procedure caused a major concern, and its use was not known until the results were obtained. Since both the lab and MSHA follow the same testing procedures, the need for a correction factor indicates an analytical-balance inaccuracy at one or the other location. Because of this concern, samples from the second preliminary study were sent to a different lab.

Table 2. Respirable Dust Measurement Results – Day 1 – Section 1 – Seam 1

	CMDPSU					CPDM		
Location	Number	Cass. #	Time (min)	Corrected Concentration mg/m^3	Uncorrected Concentration mg/m^3	Number	Serial Number	Concentration mg/m^3
1	1	155322	360	2.197	1.698	1	509015	1.447
2	2	155455	243	2.547	1.809	11	111516	1.528
3	3	155392	360	2.135	1.637	3	310526	1.42
4	4	155402	243	2.536	1.797	12	210503	
5	5	155414	360	2.108	1.610	5	610511	1.434
6	6	155390	360	1.991	1.493	6	710504	1.492
7	7	155313	360	2.080	1.581	7	509006	1.604
8	8	155388	360	2.114	1.616	8	610521	1.483
9	9	155996	360	2.103	1.604	9	310513	1.499
			Mean =	2.201	1.650			1.488
			S.D. =	0.200	0.102			0.059

Table 3. Respirable Dust Measurement Results – Day 2 – Section 2 – Seam 2

	CMDPSU					CPDM		
Location	Number	Cass. #	Time (min)	Corrected Concentration mg/m^3	Uncorrected Concentration mg/m^3	Number	Serial Number	Concentration mg/m^3
1	9	155416	360	3.208	2.710	9	310513	2.451
2	7	155412	360	3.122	2.624	7	509006	2.425
3	8	155321	360	3.258	2.760	8	610521	2.367
4	3	155299	360	3.281	2.783	3	310526	2.524
5	1	155298	360	3.161	2.662	1	509015	2.368
6	2	155464	360	3.157	2.658	11	111516	2.381
7	6	155405	360	3.210	2.712	6	710504	2.441
8	4	155401	360	3.278	2.779	12	509011	2.316
9	5	155307	360	3.151	2.653	5	610511	2.316
			Mean =	3.203	2.705			2.399
			S.D. =	0.059	0.059			0.068

Tables 2 and 3 show that the average reading of the CMDPSUs for the first day is 48% higher than that of the PDMs, and 33% higher for the second-day averages. The standard deviations in the Tables also show that the variability of the CMDPSU readings is significantly higher than those of the CPDM readings on the first day, but slightly lower than those of the CPDMs on the second day.

Dust concentrations for the first and second days are depicted graphically in the bar charts of Figures 8 and 9, respectively. The dust concentrations were significantly higher on the second day of sampling. The higher concentrations may be attributed to the fact that Section 1 utilizes a *wet-head*, dust-suppression system on the continuous mining machine, whereas Section 2 does not. Also, higher coal production may have occurred during this period in Section 2. The

difference between the CMDPSU and CPDM readings at the same location for the first and second days of the study are shown in Figure 10.

The significant differences between the CMDPSU and CPDM dust-concentration readings were a cause for concern. A different analytical laboratory was used to weigh the CMDPSU dust filters in the second preliminary study to determine if similar differences in measurements exist.

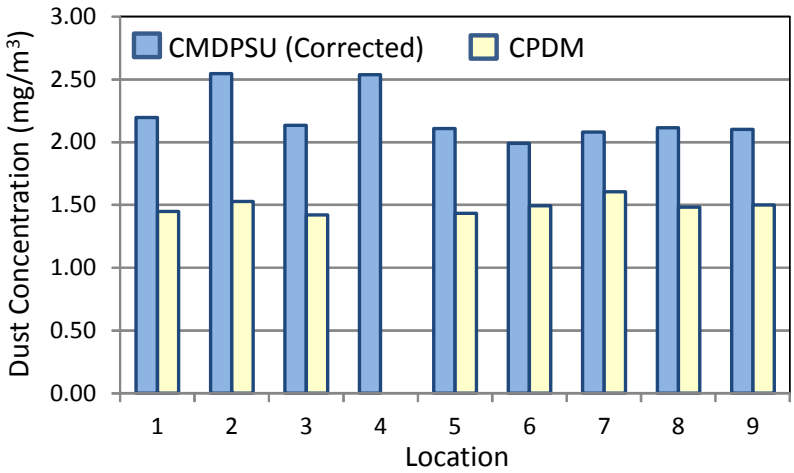

Figure 8. End-of-Test Dust Concentrations – First Day – Section 1 – Seam 1.

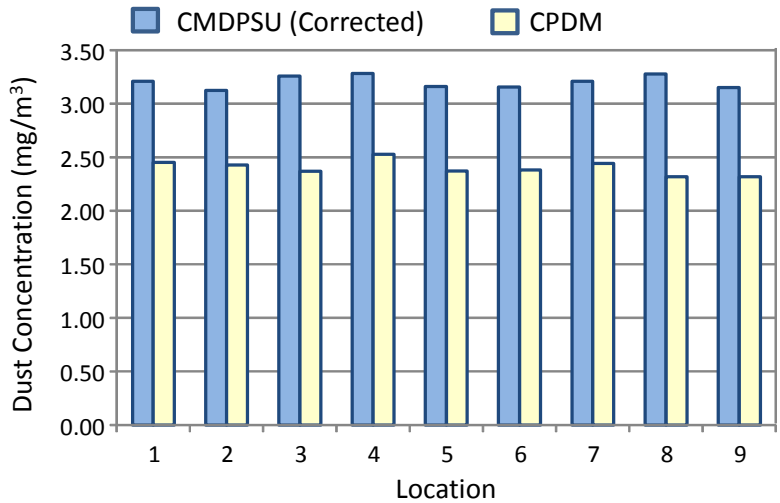

Figure 9. End-of-Test Dust Concentrations – Second Day – Section 2 – Seam 2.

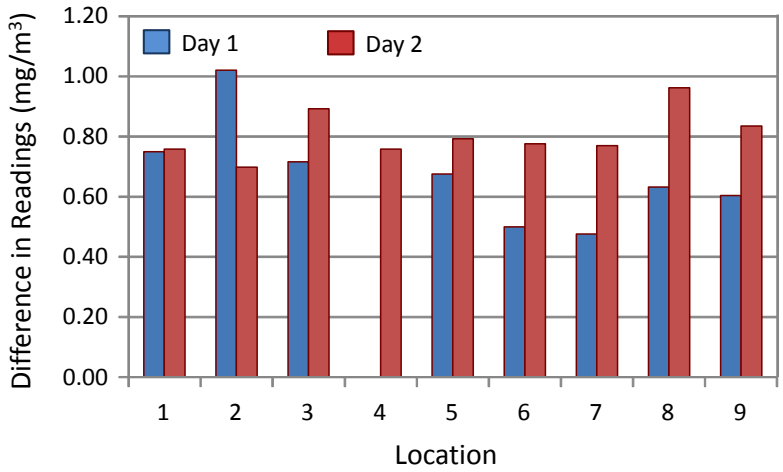

Figure 10. Difference (CMDPSU – CPDM) between readings for devices at the same location.

The CPDM readings from the first preliminary study indicate that the respirable-dust concentration decreases with the distance from the mining face, as shown in Figure 11. The second preliminary study was designed to verify this hypothesis and to determine if the separated particle-size distribution differed between the CMDPSU and the CPDM. The results of the second preliminary study follow.

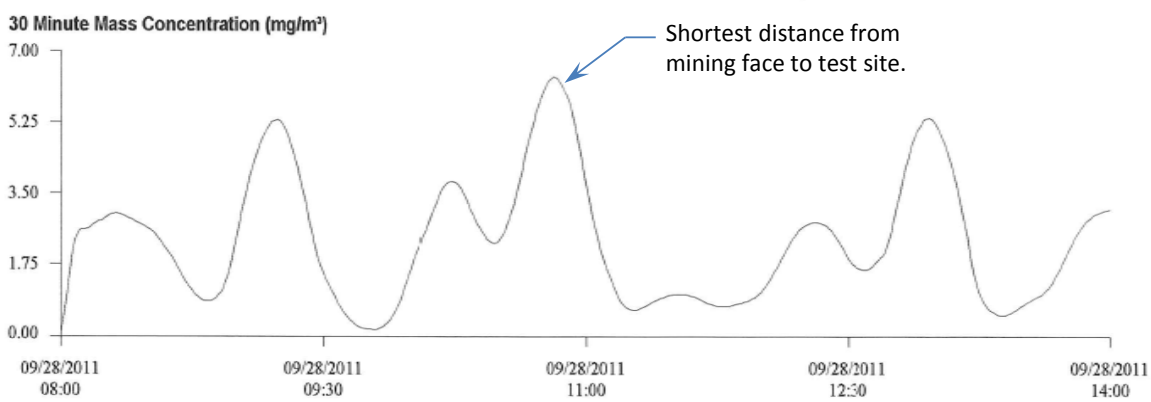

Figure 11. Plot of the 30-minute dust concentration for a CPDM from the Preliminary Study 1.

Preliminary Study 2

The second preliminary study was conducted over three days, at Section 1 in Seam 1 at Mine B. Similar to the initial study, the measurement locations are in the far left return airway of Section 1, as illustrated in Figure 12. The inlets of three CPDMs and three CMDPSUs were mounted, side-by-side, to a wire-mesh at each of the three measurement locations shown in Figure 12. Each instrument was set to operate for the same time period.

The location of each numbered monitoring device is shown in Figures 13, 14, and 15 for the first, second, and third sampling days, respectively. The data from the CPDMs were downloaded to a

computer at the mine site after each day of sampling. The filter cassettes from the CMDPSUs were shipped to a different analytical laboratory than that in the first preliminary study, after sampling was completed. The analytical laboratory was selected based on NIOSH using the lab for weighing filters in its dust research programs. The results of the first, second, and third testing days are shown in Tables 4, 5, and 6, respectively.

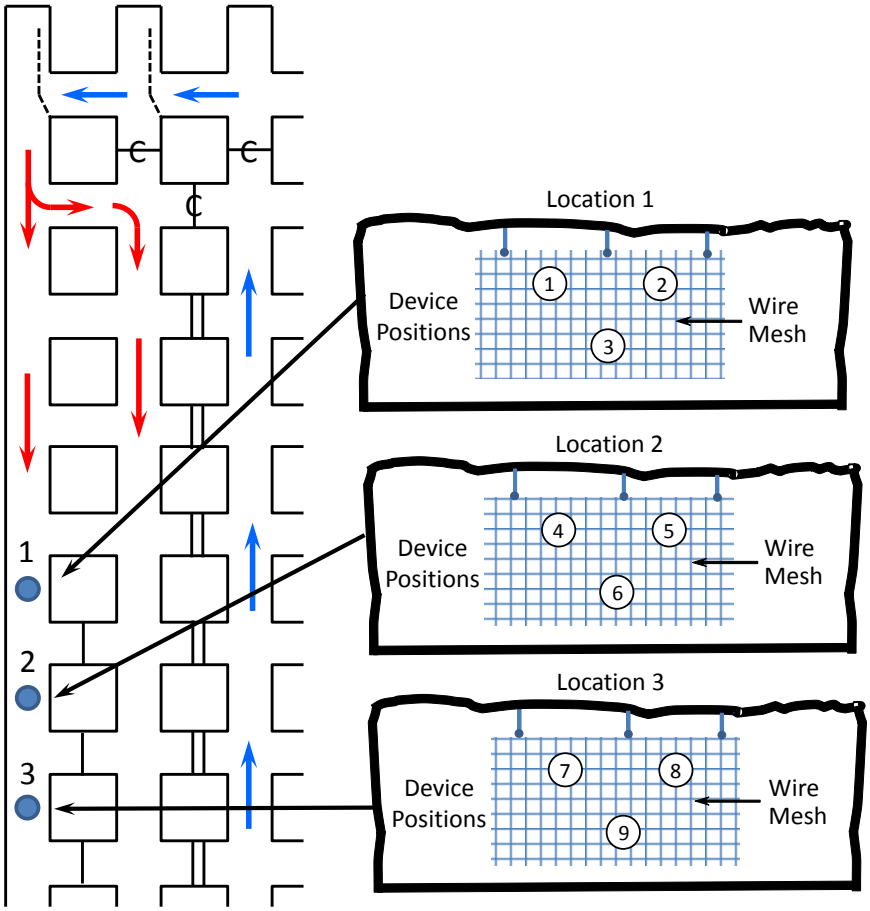

Figure 12. Measurement arrangement for Preliminary Study 2.

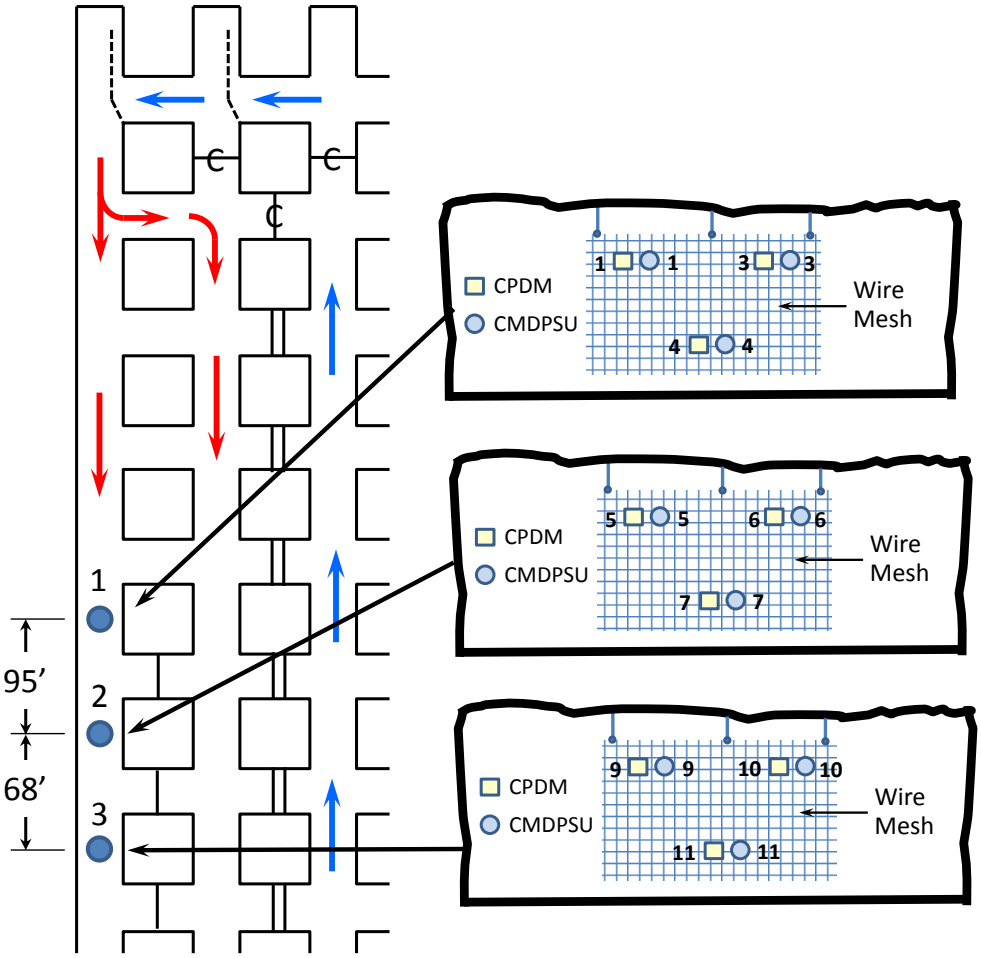

Figure 13. Dust monitor arrangement for Day 1.

Table 4. Respirable Dust Measurement Results – Day 1 – Section 1 – Seam 1

CMDPSU						CPDM		
Location	Position	Device Number	Cass. #	Time (min)	Concentration mg/m^3	Number	Serial Number	Concentration mg/m^3
1	1	1	155 987	297	2.359	1	509015	3.185
1	2	3	156 142	298	2.346	3	310526	3.169
1	3	4	155 933	296	2.203	4	310506	2.866
2	4	5	156 202	289	2.298	5	610511	2.808
2	5	6	156 058	289	2.246	6	710504	3.021
2	6	7	156 220	289	2.111	7	509006	2.636
3	7	9	156 137	280	2.202	9	310513	2.810
3	8	10	156 143	280	2.305	10	310516	2.797
3	9	11	155 910	280	2.189	11	111516	2.726
			Location 1	Mean =	2.303			3.073
			Location 2	Mean =	2.218			2.822
			Location 3	Mean =	2.232			2.778
			Total	Mean =	2.251			2.891
			Total	S.D. =	0.0821			0.1923

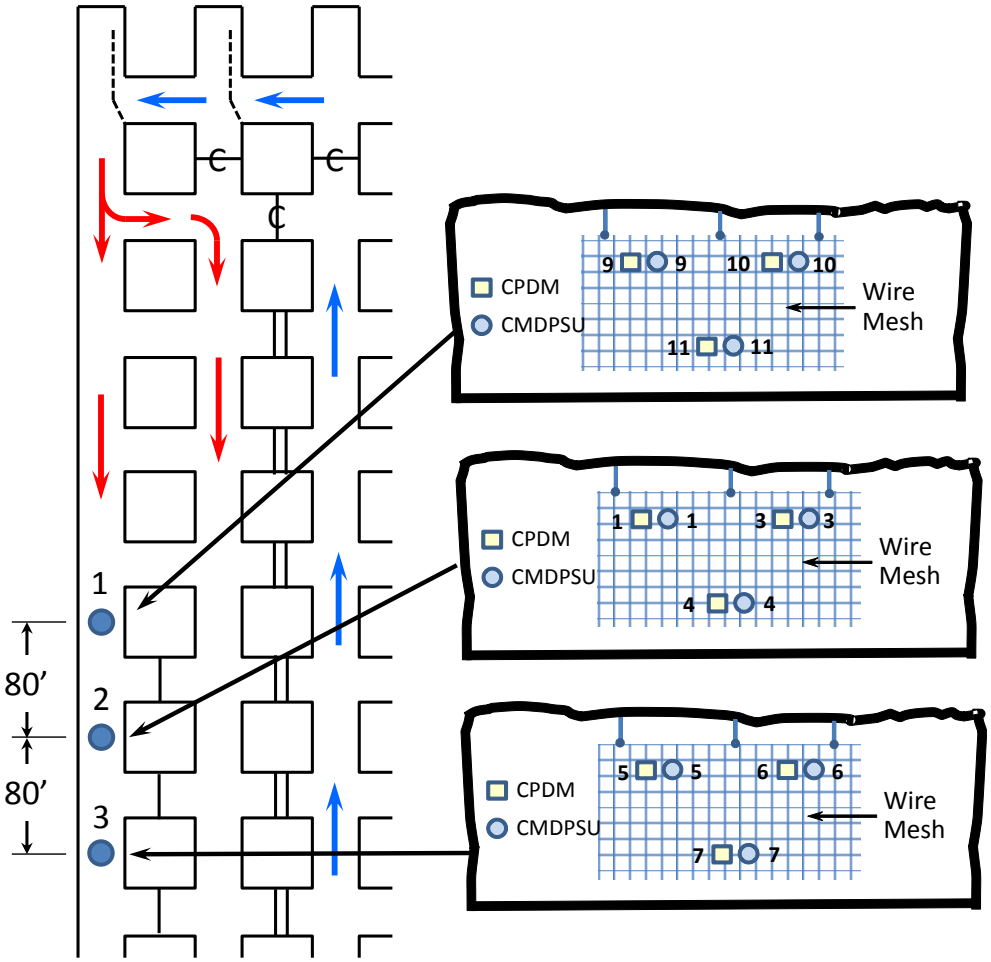

Figure 14. Dust monitor arrangement for Day 2.

Table 5. Respirable Dust Measurement Results – Day 2 – Section 1 – Seam 1

CMDPSU						CPDM		
Location	Position	Device Number	Cass. #	Time (min)	Concentration mg/m^3	Number	Serial Number	Concentration mg/m^3
1	1	9	156 195	302	2.184	9	310513	2.827
1	2	10	155 938	303	2.096	10	310516	2.668
1	3	11	155 304	303	2.078	11	111516	2.728
2	4	1	155 895	301	2.083	1	509015	2.509
2	5	3	156 204	302	2.134	3	310526	2.786
2	6	4	156 003	301	2.103	4	310506	2.871
3	7	5	155 892	302	2.253	5	610511	2.766
3	8	6	156 046	302	2.030	6	710504	2.678
3	9	7	156 136	303	2.137	7	509006	2.836
			Location 1	Mean =	2.119			2.741
			Location 2	Mean =	2.107			2.722
			Location 3	Mean =	2.140			2.760
			Total	Mean =	2.122			2.741
			Total	S.D. =	0.0655			0.1114

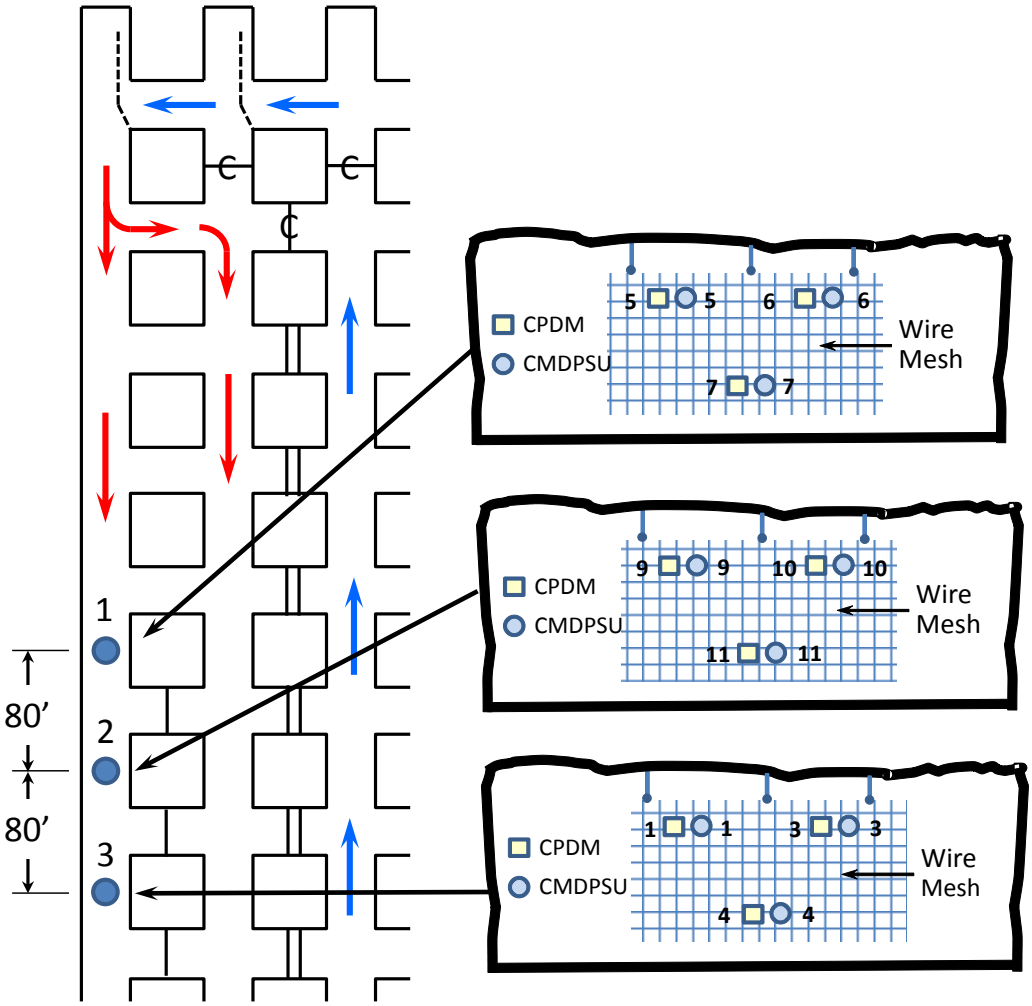

Figure 15. Dust monitor arrangement for Day 3.

Table 6. Respirable Dust Measurement Results – Day 3 – Section 1 – Seam 1

CMDPSU						CPDM		
Location	Position	Device Number	Cass. #	Time (min)	Concentration mg/m^3	Number	Serial Number	Concentration mg/m^3
1	1	5	156 204	300	2.134	5	610511	2.627
1	2	6	156 003	300	2.103	6	710504	2.678
1	3	7	155 895	300	2.083	7	509006	2.822
2	4	9	156 046	300	2.030	9	310513	2.656
2	5	10	156 136	300	2.137	10	310516	2.786
2	6	11	155 892	300	2.253	11	111516	2.861
3	7	1	155 938	300	2.096	1	509015	2.675
3	8	3	155 304	300	2.078	3	310526	2.821
3	9	4	156 195	300	2.184	4	310506	3.136
			Location 1	Mean =	2.107			2.709
			Location 2	Mean =	2.140			2.768
			Location 3	Mean =	2.119			2.877
			Total	Mean =	2.122			2.785
			Total	S.D. =	0.0655			0.1567

Tables 4, 5, and 6 show that the average reading of the CPDMs for the first day was 28% higher than that of the CMDPSUs, 29% higher for the second-day (12/01/2011), and 31% higher for the third-day (12/02/2011). These increases are the opposite of those in the first preliminary study, where the CMDPSU readings were consistently higher than those of the CPDMs. The standard deviations in the Tables also show that the variability of the CMDPSU readings is consistently lower than that of the CPDM readings.

The totally opposite results that occur from the first and second preliminary study are confounding. It appears that significant differences may be attributed to the analytical lab where the filters are weighed. However, more of these types of studies are needed to draw a definitive conclusion.

Dust concentrations for the first, second, and third days are depicted graphically in the bar charts of Figures 16, 17, and 18, respectively. These plots do not display the decreasing trend as a function of distance that was hypothesized after the initial study.

The difference between the CMDPSU and CPDM readings at the same position for the first, second, and third days of the second study are shown in Figure 19.

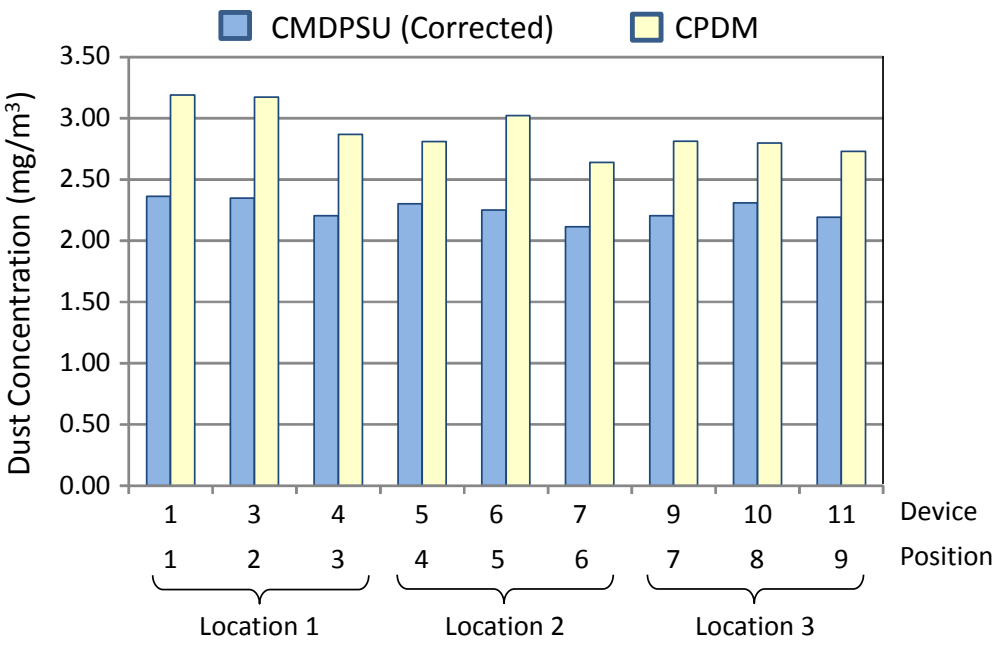

Figure 16. End-of-Test Dust Concentrations – Day 1 – Section 1.

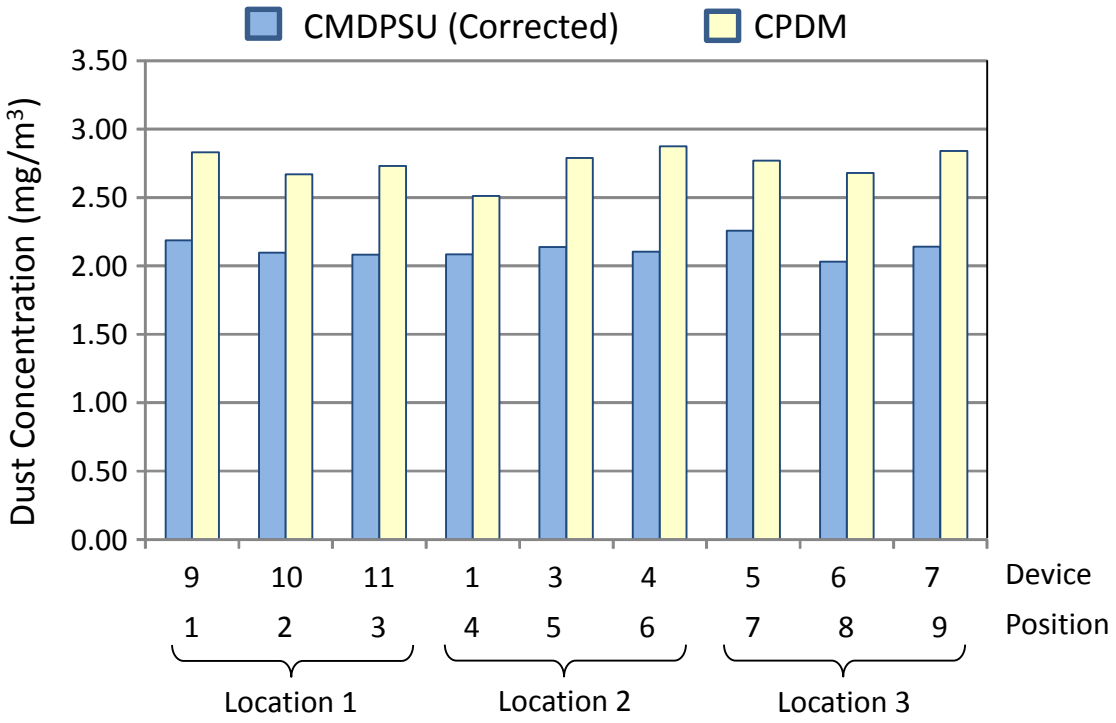

Figure 17. End-of-Test Dust Concentrations – Day 2 – Section 1.

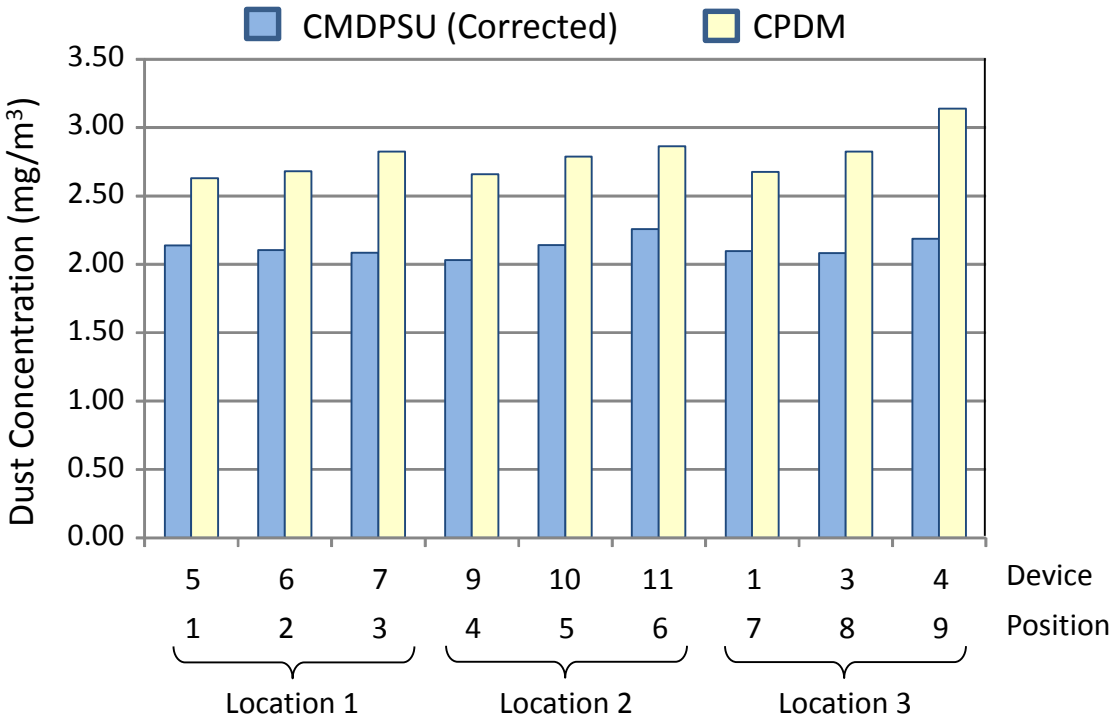

Figure 18. End-of-Test Dust Concentrations – Day 3 – Section 1.

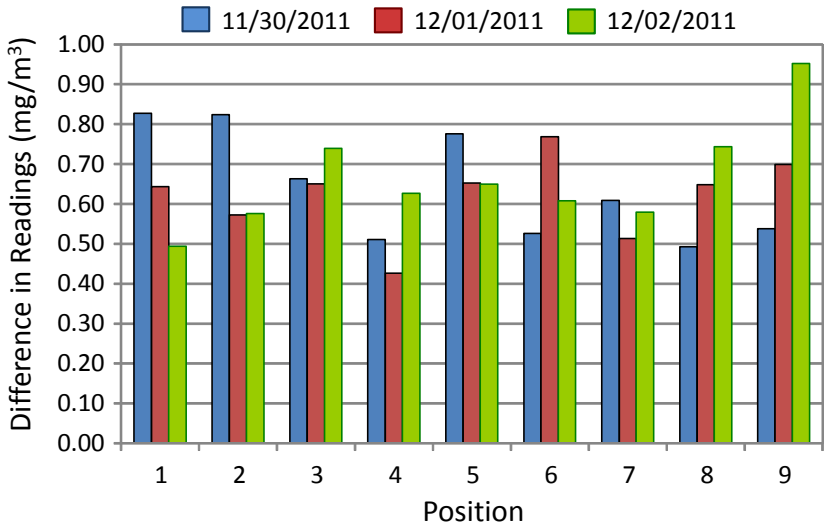

Figure 19. Difference (CPDM – CMDPSU) between readings for devices at the same location.

In Depth Study for Characterizing Variability of Dust Measurements

Methodology

To address the variability of dust measurements taken in underground coal mines, measurements of continuous-miner-operator dust exposure were taken in three coal mines (across three MSHA Districts) for approximately 30 consecutive work days in each mine. The resulting measured variability captures all sources of measurement variability including instrument, personal wearing of samplers, and daily fluctuations in dust levels.

Mine and Unit Selection

Mine selection for these tests covered a variety of coal seams and conditions; however, selection could not be random because of the logistics associated with sampling equipment and trained personnel. The mining method in all three mines was room-and-pillar, with continuous-mining (CM) machines used for coal production. Two to three test sections within each mine were selected based on the sections having production levels close to the mine's average section production for the past 30 days. As stated earlier, each production section contained two mechanized mining units (MMUs), with each MMU operating within a single air split, supplied from a fishtail ventilation (dual split) arrangement for the overall section. The continuous mining machines were equipped with dust scrubbers, and electric face-haulage vehicles (either shuttle cars or battery haulers) were used to transport coal to a common section belt conveyor. Seam heights varied from 50 to 65 inches.

Instruments

The dust sampling devices used were the PDM 3600 continuous personal dust monitors, (CPDM) manufactured by Thermo Scientific. Previously used PDM 3600 dust samplers were refurbished and calibrated by the manufacturer or mine personnel, depending on the condition of the samplers. In all cases, the flow rates were verified using a primary flow standard of ± 1% and a mass audit (±10% of calibrated mass). Instrument performance was confirmed before and after sampling at each mine. Manufacturer's recommended daily maintenance and battery-charging procedures were followed including cleaning and filter changing after each shift of sampling. Spare units were available to replace failed ones.

Personal Sampling Procedure

A dust technician was trained and made responsible for daily care, maintenance, filter changing, programming, and data downloading at each mine. During the first week of data collection at each mine, a principal researcher for the project was present to oversee these functions and to discuss the study objectives with miners. The CPDM instruments were programmed using the manufacturer-provided WinPDM™ software for a normal shift start time and duration. These were full-shift samples, as opposed to the current practice of removing samplers after eight hours. It was understood that some workers selected may occasionally begin their shifts early or end them late, but for the purposes of this study, shift duration was programmed for the normally scheduled start and end times. It was recognized that this procedure may occasionally miss measurements associated with travel to or from the section; however, maintaining a constant shift length was considered important for the purposes of this study.

At the conclusion of each shift, the dust samplers were returned to the dust technician who downloaded the data into the Personal Dust Monitor Management Studio (PDMMS) database management system. The technician then cleaned the instruments, replaced filters, programmed the instruments for the next shift, and charged the battery. The PDMMS database was backed up by downloading data with the manufacturer's WinPDM software. Database information was electronically transmitted to the principal researchers on a regular basis for review and analysis.

Both day- and evening-shift continuous-mining-machine operators wore a PDM programmed to sample from portal to portal for the scheduled shift. Because each section used two mining machines, each with an operator, a total of four PDMs were required for each shift. Operators were identified numerically to maintain the anonymity of the individual. PDMs were worn from portal to portal by one individual and no exchange of PDMs occurred.

At Mine A, the continuous-mining-machine operator and the helper switched jobs at mid-shift as a control strategy for reducing noise-exposure. Because the intent of the study was to quantify operator variability, only data for the time an individual operated the CM as the designated occupation was used.

Data Validation

Three criteria were used to validate the data prior to analysis. If all of the following criteria were not met, the measurement was considered invalid and discarded:

- PDM internal diagnostics – PDM hardware faults, such as abnormal flow, pressure, etc. that are indicators of a pinched hose or other problems that would invalidate a sample.
- PDMMS software diagnostics – criteria that distinguish valid/invalid sample conditions, e.g., an inactive tilt sensor for 45 or more minutes implies that the PDM was not worn appropriately by the operator.
- Experimental design criteria – notes were recorded to establish invalid mining activities, e.g., no coal production during the shift or the individual wearing the PDM was not working at the designated occupation.

In all cases, data were only excluded for a clearly defined instrument fault or a failure to meet the experimental design criteria.

Dust Concentration Measurements

This section summarizes the analysis of dust samples collected from the three underground coal mines, identified as Mine A, Mine B, and Mine C. Start dates, end dates, and the total number of valid single-shift measurements are listed in Table .

Table 7. Overview of Dust Sampling Program

Mine	Start Date	End Date	No. of Observations
Mine A	04/11/2012	05/25/2012	197
Mine B	06/12/2012	08/07/2012	206
Mine C	09/04/2012	10/21/2012	197

Data Characterization

The first step of data characterization is to determine a suitable distribution for representing the data. Once this is done, many different types of analyses can be performed. For the data of this study, many different distributions were tested for goodness-of-fit before selecting the Johnson transform.

The general form of the Johnson transformation is:

$$Z = \gamma + \delta\, f\left(\frac{X-\theta}{\sigma}\right) \tag{1}$$

Where f denotes the transformation function; Z is a standard normal random variable; γ and δ are shape parameters; σ is a scale parameter; and θ is a location parameter. Without loss of generality, it is assumed that $\delta > 0$ and $\theta > 0$.

The Johnson transformation consists of three types of curves – the bounded system (S_B), the unbounded system (S_U), and the log-normal system (S_L). For this study, the lognormal system provided the best fit for the data. The transformation for the lognormal system of distributions to the standard normal distribution is defined as follows:

$$Z = \gamma + \delta\, ln\left(\frac{X-\theta}{\sigma}\right) \tag{2}$$

The inverse transform back to the original value, i.e., *X*, (dust concentration values for this application) is determined as follows:

$$\delta\, ln\left(\frac{X-\theta}{\sigma}\right) = Z - \gamma \tag{3}$$

$$ln\left(\frac{X-\theta}{\sigma}\right) = \frac{Z-\gamma}{\delta} \tag{4}$$

$$\left(\frac{X-\theta}{\sigma}\right) = e^{\frac{Z-\gamma}{\delta}} \tag{5}$$

$$X - \theta = \sigma e^{\frac{Z-\gamma}{\delta}} \tag{6}$$

$$X = \theta + \sigma e^{\frac{Z-\gamma}{\delta}} \tag{7}$$

The Anderson Darling (AD) goodness-of-fit test for normality has the following functional form:

$$\mathrm{AD} = \sum_{i=1}^{n} \frac{1-2i}{n}\left\{\ln\left(F_o\left[Z_{(i)}\right]\right) + \ln\left(1 - F_o\left[Z_{(n+1-i)}\right]\right)\right\} - n \tag{8}$$

Where F_o is the assumed (normal) distribution with the assumed or sample-estimated parameters (μ, σ); $Z_{(i)}$ is the ith sorted, standardized, sample value; *n* is the sample size; *ln* is the natural logarithm (base *e*), and subscript *i* occurs from 1 to *n*.

The following is a step-by-step summary of the Anderson-Darling (AD) Test for the Johnson transformed data:

- Sort Johnson transformed data (*X*) in ascending order and standardize: $Z = \frac{x-\mu}{\sigma}$
- Establish the null hypothesis: assume a normal (μ, σ) distribution
- Obtain the distribution parameters: μ and σ
- Obtain the *F*(*Z*) cumulative probability
- Obtain the logarithm of the above: *ln* [*F*(*Z*)]
- Sort cumulative probabilities *F*(*Z*) in descending order ($n - i + 1$)
- Find values of $1 - F(Z)$ for the above
- Find the logarithm of the above: *ln* [$1 - F(Z)$]
- Evaluate via (9) Test statistics, AD
- Compute the *P-value*

Results

Figure 20 shows a normal probability plot of the Johnson transformed data for Mine B. From this goodness-of-fit test, the AD statistic is 0.202 (a significantly low value) which means a very good fit, and the *P-value* (probability of the transformed data to be normal) is 0.877. This *P-value* was higher than any other distribution (lognormal, Weibull, Box-Cox transformation, exponential) tested. The actual values of dust exposure were also subjected to normality testing with the following results: AD of 0.656 and a *P-value* of 0.086. The Johnson transformed data provides a very good representation of the dust distribution compared with a normal distribution for the data. Results for the other two mines were also favorable, as summarized in Table .

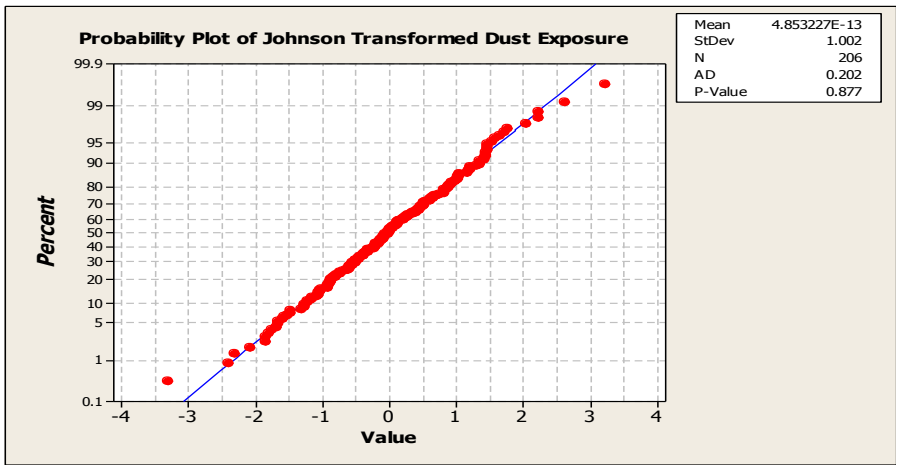

Figure 20. AD test for Mine B using Johnson transformed data.

Table 8. Summary of Goodness-of-fit Results for Data Using Johnson Transform

Mine	Anderson-Darling Value	P-Value
A	0.218	0.83
B	0.202	0.88
C	0.198	0.88

The RSD is defined as the absolute value of the standard deviation divided by the mean. The RSD allows standard deviations of different measurements to be compared meaningfully. For example, the MSHA-proposed regulations used a relative standard deviation of 0.78 to establish the single-shift ECV. As previously discussed, this procedure considers instrument variability under very controlled conditions. The goal of this study is to quantify all variability associated with full shift personal sampling. This includes variability associated with a miner wearing the personal sampling device in a workplace environment, as well as spatial and temporal variability that is an unavoidable part of the overall sampling variability.

The RSD values for the data collected at Mines A, B, and C are presented in

Table . Inspection of this table shows that the RSD values are significantly higher than 0.078, which is the value used by MSHA for establishing the ECV in the proposed rule.

Because the purpose of the study was to characterize the variability of dust measurements for underground coal mines, the pooled relative standard deviation was computed. It is recognized that some mines will have lower or higher variability than the pooled RSD, but the pooled RSD is the most appropriate estimate of the variability of dust concentration for a typical underground coal mine in the U.S. The pooled RSD is the square root of the weighted variance as shown below.

$$\text{Pooled RSD} = \sqrt{\frac{(196)(0.45)^2 + (205)(0.32)^2 + (196)(0.60)^2}{597}} = 0.47$$

Table 9. Relative Standard Deviation (RSD) Values of Dust Measurements

	Mine A	Mine B	Mine C	Pooled
Sample Size	197	206	197	600
RSD	0.45	0.32	0.60	0.47

The next step in the analysis was to characterize the variability of dust measurements for a representative mine based on the data collected from the three mines in the study. This was accomplished by first standardizing the data by dividing individual dust measurements by the mean value for that particular mine. Next, the data were combined into one data set, and the relative standard deviation (RSD) was computed. This process produced an RSD of 0.47 (a value that is identical to the pooled estimate, as expected). Finally, the Johnson transform was used to convert the data to the standard normal random variable, and a goodness of fit test was performed as described above. Results of this process are summarized in Figure 11, showing an AD value of 0.312 and *P-value* of 0.550. (It is noted here that conducting a goodness-of-fit test assuming a normal distribution produced very poor results, with an AD value of 7.21 and a P-value of less than 0.005.)

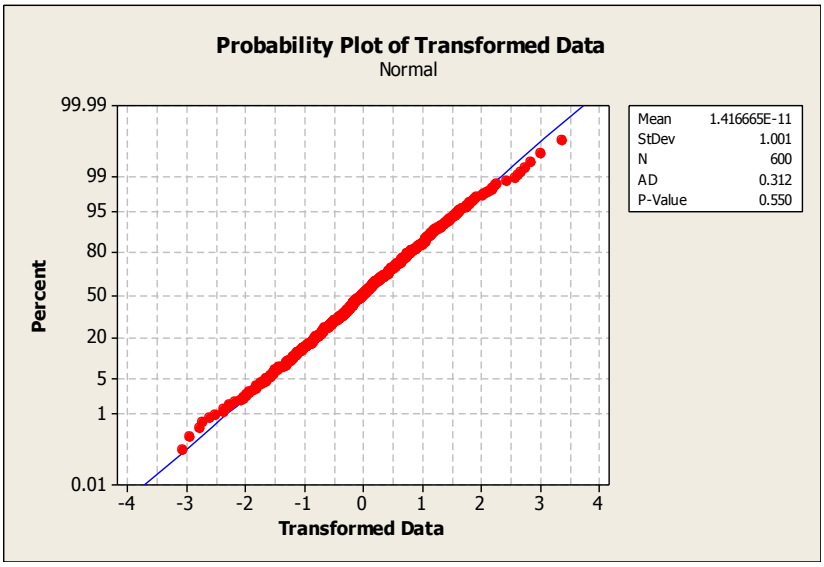

Figure 11. AD Test for the combined, Johnson-transformed mine dust measurements.

Table shows the shape, location, and scale parameters that were used to transform the data to the standard normal random variable.

Table 10. Shape, Location, and Scale Parameter Estimates for Combined Data

Parameter	Estimated Value
Shape γ	-0.9575
Shape δ	3.173
Location θ	-0.421
Scale σ	1.0

Consequently, the equation for the Johnson transformation is,

$$Z = -0.96 + 3.173\left[ln\left(\frac{X + 0.421}{1.0}\right)\right]$$

where Z is the transformed dust exposure and X is the measured dust exposure.

Discussion

The previous section statistically defined the variability that was measured in three underground coal mines. In this section, the anticipated impact of the measured variability on the proposed dust rules is presented, as well as alternatives to the proposed rules.

It should be noted that the measured overall variability includes all the variability associated with a miner wearing a personal sampling device in a workplace environment, as well as spatial and temporal variability that occurs in mines during normal production. The measured variability includes the instrument sampling error, measurement error, and daily variability of dust concentration, and represents the best estimate of the long-term variability to which miners are

exposed. This overall variability is a more appropriate value to use for calculation of ECVs than the instrument-to-instrument variability based only on stationary area sampling. The overall variability accounts for all variability introduced by real-world effects and is based on valid statistical methods.

Impact of ECV

The proposed rules define an Excessive Concentration Value of 1.13 mg/m^3, which is used to determine whether a single-shift sample exceeds the proposed standard of 1.00 mg/m^3. (ECVs for other applicable standards are provided in the background section.) This is based on the assertion that the instrument-to-instrument variability (between CPDMs) can be substituted for the measurement variability, and that this error is normally distributed and accounts for all the error associated with sampling measurement. To correctly calculate an ECV for determining compliance, a more appropriate approach is required to account for all of the variability sources associated with sampling measurement. This can be accomplished by using the variability as characterized in this study of 600 single-shift measurements.

Results from this study have shown that the pooled RSD is 0.47 and that the Johnson transformation can be used to transform the data to the standard normal distribution for analysis. Using 1.645 as the 95% upper confidence bound for the transformed data, corresponding dust concentration values were determined for a mean concentration of 1.00 mg/m^3 using the inverse transform. Figure shows the 95% upper confidence bound to be 1.85 mg/m^3 for a single-shift sample when the mean is 1.00 mg/m^3. This value is significantly higher than the proposed ECV of 1.13 mg/m^3 that was developed from the RSD of 0.078 determined from the CPDM's collecting dust samples in a Lippmann chamber. It should also be noted that there is a probability that single-shift measurements below 1.85 mg/m^3, 1.13 mg/m^3, or even 1.00 mg/m^3 could come from a distribution with a mean value greater than 1.00 mg/m^3. The probability of this type of error (for defined levels of dust concentration) can be reduced by using multiple-shift samples.

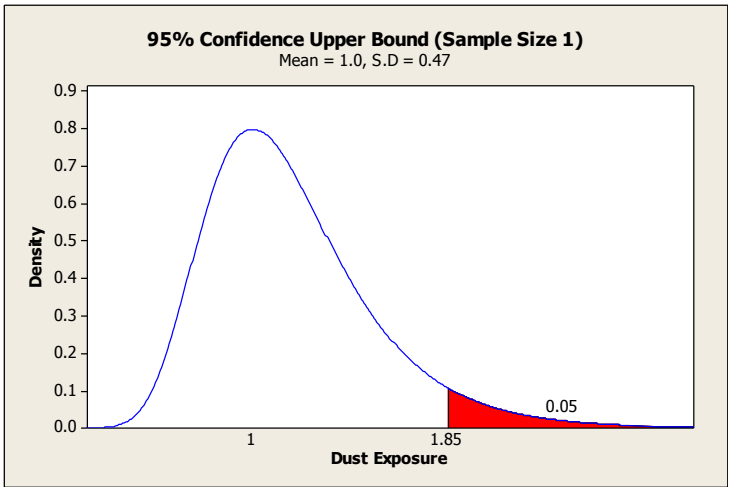

Figure 22. 95% Upper confidence bound for a single-shift sample.

Impact of Sample Size

Variability can be reduced significantly by using the mean of several shifts instead of single-shift samples. Consequently, similar analyses using the measured variability presented in this paper were conducted for sample sizes of five and ten, in addition to one, with the results summarized in Table . As shown in the table, increasing the number of observations provides significantly lower variability compared with single-shift observations.

Table 11. Revised CPDM Excessive Concentration Values for Different Sample Sizes

	Sample Size			
	1	1	5	10
Applicable Standard (mg/m^3)	Proposed Rule ECV (mg/m^3)	Revised ECV (mg/m^3)	Revised ECV (mg/m^3)	Revised ECV (mg/m^3)
2	2.26	3.7	2.58	2.36
1.9	2.15	3.51	2.44	2.23
1.8	2.04	3.32	2.31	2.11
1.7	1.92	3.15	2.19	2.00
1.6	1.81	2.96	2.06	1.88
1.5	1.70	2.77	1.93	1.76
1.4	1.59	2.58	1.8	1.64
1.3	1.47	2.41	1.68	1.53
1.2	1.36	2.21	1.54	1.40

1.1	1.25	2.04	1.42	1.29
1	1.13	1.85	1.29	1.17
0.9	1.02	1.66	1.15	1.05
0.8	0.91	1.47	1.03	0.94
0.7	0.80	1.3	0.91	0.83
0.6	0.68	1.11	0.78	0.71
0.5	0.57	0.93	0.64	0.59
0.4	0.46	0.74	0.51	0.46
0.3	0.34	0.56	0.39	0.35
0.2	0.23	0.38	0.26	0.24

Summary and Conclusions

Protection of miners from excessive exposure to respirable dust depends on a suitable standard for exposure limits and reliable methods of determining if the standard is being met. MSHA has proposed a new dust standard as well as a new procedure for compliance testing based on results of a NIOSH study that established instrument-to-instrument variability under very controlled conditions (Volkwein et al., 2004). From this, MSHA developed Excessive Concentration Values for compliance based on single-shift samples. At that time, the NIOSH data were the best available data for MSHA to use.

New data presented in this paper are derived from dust concentration measurements of individuals continuously wearing CPDM's in the workplace representing a better estimate of variability than was previously available. The variability characterized in this study includes all sources of variability associated with the instrument when worn in the workplace as well as spatial and temporal variations in exposure that occur in the work environment. The results show a relative standard deviation of 0.47 to be a more appropriate RSD value for use in establishing the ECV. While additional data from more mines may help to refine the new RSD value, the broad range of values from the individual mines in this study suggest that further data would likely fall within this range and that the pooled estimate of RSD would not change substantially.

While a single-shift sample could be used to determine compliance, it must be accompanied by the most appropriate estimate of variability. Results from this study have demonstrated that the variability associated with single-shift samples will be significantly higher than the variability used to develop the proposed standard. This variability can be reduced significantly by using the mean value of five, or more, measurements instead of a single-shift measurement.

References

Cecala, A.B. and E.D. Thimons (1986). Impact of Background Sources on Dust Exposure of Bag Machine Operator. CDC/NIOSH IC 9089, pp 10.

Colinet, J.F. (Jan. 2010). "Chp. 2 – Sampling to Quantify Respirable Dust Generation," *Best Practices for Dust Control in Coal Mining*, CDC/NIOSH Information Circular IC 9517, pp. 11 – 12.

NIOSH (National Institute for Occupational Safety and Health) (1995). Criteria for a recommended standard: Occupational exposure to coal mine dust. DHHS (NIOSH) Publication No. 95-106. Washington, DC.

NIOSH (National Institute for Occupational Safety and Health) (2008). Work-related lung disease surveillance report 2007, Volume 1 DHHS (NIOSH) Publication No. 2008-143a. Cincinnati, OH, National Institute for Occupational Safety and Health.

Page S, J.C. Volkwein, R.P. Vinson, G.J. Joy, S.E. Mischler, D.P. Tuchman, and L.J. McWilliams (2008). "Equivalency of a personal dust monitor to the current United States coal mine respirable dust sampler," *Journal of Environmental Monitoring*, Vol. 10, No. 1, pp. 96–101.

Public Law 91-173 (1969). Federal Coal Mine Health and Safety Act of 1969.

Public Law 95-164 (1977). Federal Mine Safety and Health Amendments of 1977.

Schmees D.K., Y.H. Wu, and J.H. Vincent (2008). "Visualization of the air flow around a life-sized, heated, breathing mannequin at ultra-low windspeeds," *Annals of Occupational Hygiene*, Vol. 52, No. 5, pp. 351-360.

U.S. Department of Labor (2012). 30 CFR 70.100, Part 70 – Mandatory Health Standards – Underground Coal Mines, Title 30 – Code of Federal Regulations.

U.S. Department of Labor, Mine Safety and Health Administration, (Oct. 19, 2010). 30 CFR Parts 70, 71, 72, et al. "Lowering Miners' Exposure to Respirable Coal Mine Dust, Including Continuous Personal Dust Monitors, Proposed Rule," pp. 64412-64506.

Vincent, JH. (2007). Aerosol sampling: science, standards, Instrumentation and applications. West Sussex, UK: John Wiley & Sons, Ltd.

Vinson, R.P., J.C. Volkwein, and L.J. McWillaims (Aug 2007). "Determining the spatioal variability of personal sampler inlet locations," *Journal of Occupational Environmental Hygiene*, Vol. 4, No. 9, pp. 708-714.

Volkwein, J.C., R.P. Vinson, L.J. McWilliams, D.P. Tuchman, and S.E. Mischler (Jun 2004). *Performance of a New Personal Respirable Dust Monitor for Mine Use*, CDC/NIOSH Report of Investigations 9663, pp. 3-4.